GEN. TOLERANCES	0.5 - 6	±0.1	6 - 30	±0.2	30 - 120	±0.3	120 - 315	±0.5	315 - 1000	±0.8	1000 - 2000	±1.2	2000 - 4000	±2	4000 - 8000	±3
GEN. MACHINING	0.4		1.6		3.2		6.3		12.6		25 ROUGH					

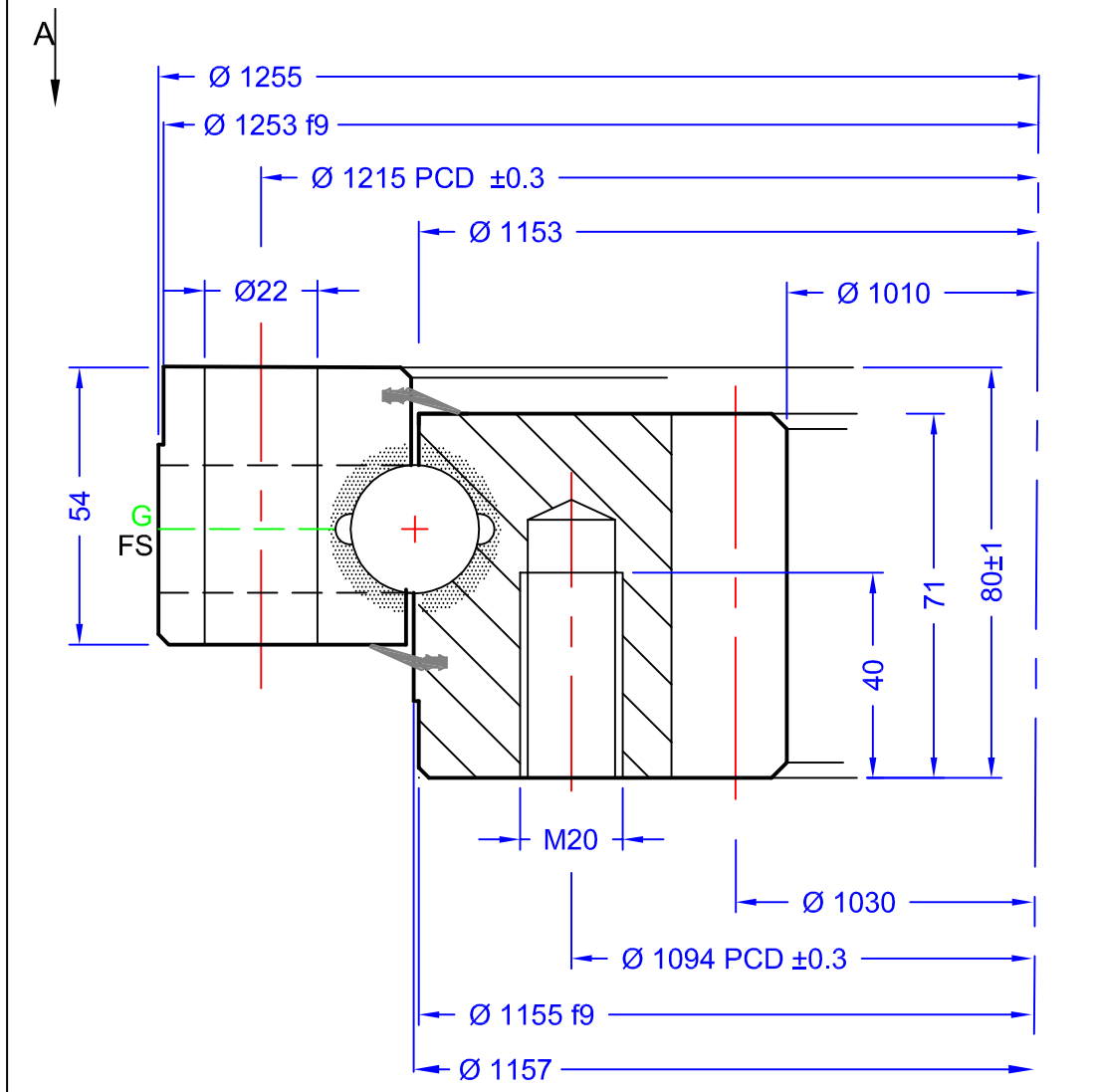

VIEW ON 'A' SHOWING DRILLING PATTERN AND OTHER DETAILS

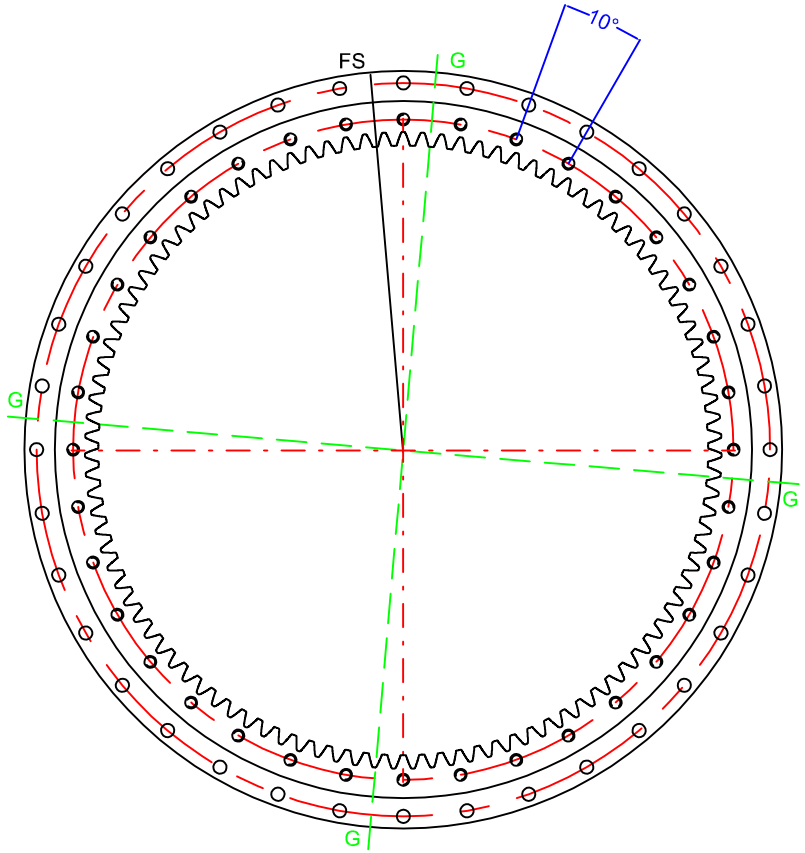

GEAR DATA	SPUR	WORM	HELICAL
HARDENED GEAR	NO		
NUMBER OF TEETH (z)	103	MODULE (m)	10
PRESSURE ANGLE (∝)	20°	DP	
ADDENDUM COEFFICIENT (x)	0		
PROFILE CORRECTION (xm)	0	CALCULATED GEAR STRENGTH	
TRUNCATION (km)	0	Fz (Normal)	KN
PITCH CIRCLE DIAMETER	1030 mm	Fz (Max)	KN
MEASUREMENT ON K TEETH	mm	Pin Diameter	mm
RUNOUT NOT HARDENED/HARDENED			

Designed in accordance with designated QCB SLEWING RING STANDARDS
Non toleranced dimensions to ISO 2768-1 m
All burrs and sharp edges to be removed; Standard corner chamfer 1mm x 45°
Internal radial and axial clearance figures to QCB standard 2014 or revisions thereof
The HARDNESS GAP is to be indicated by stamped letter R or a PAINT mark on the exterior surface
The high point of gear eccentricity to be indicated by GREEN or BLUE paint on 3 teeth

BOLT DATA					
INNER	36 =	MOUNTING HOLES	M20	AXIAL PLAY	0.15-0.35 mm
OUTER	36 =	MOUNTING HOLES	Ø 22	RADIAL PLAY	0.15-0.35 mm
GREASE HOLES	'G'		4 x M8	TURNING TORQUE	Nm
LOADING PLUG	'FS'	SOFT ZONE	'R'	MATERIAL	42CrMo4 Q&T
		SEAL SIZE	TBA	WEIGHT	180 kg (est)
				DEPTH OF HARDENING (55-58HRc)	mm

© NBC GROUP LTD. NOT TO BE COPIED WITHOUT PERMISSION

REV	DATE	MODIFICATION	REVISED BY
1			

QCB Bearings — SLEWING RINGS & DRIVES

imported by NBC Group Ltd
Orleton Lane, Wellington, Telford, TF1 2BG, UK
P: 01952 222300 F: 01952 242938
www.nbcgroup.co.uk

QCB® is a registered trademark of NBC Group Ltd

QCB or NBC DRAWING NUMBER

SIG 1255 25 01 AA LM

QCB RS 11/2016

DRAWN:	LW
DATE:	02/02/2016
CHECKED:	LJM