| GEN. TOLERANCES | 0.5 - 6 | ±0.1 | 6 - 30 | ±0.2 | 30 - 120 | ±0.3 | 120 - 315 | ±0.5 | 315 - 1000 | ±0.8 | 1000 - 2000 | ±1.2 | 2000 - 4000 | ±2 | 4000 - 8000 | ±3 |
|---|---|---|---|---|---|---|---|---|---|---|---|---|---|---|---|---|
| GEN. MACHINING | 0.4 | | 1.6 | | 3.2 | | 6.3 | | 12.6 | | 25 ROUGH | | | | | |

| Slewing Drive Performance Data | |
|---|---|
| Gear Ratio | 102:1 |
| Rated Output Torque | 10000 N.m |
| Output Torque（Max.） | 13000 N.m |
| Tilting Moment Torque（Max.） | 135.6 KN.m |
| Holding Torque | 72.3 KN.m |
| Axial Load（Max.） | 976 kN |
| Self Locking Gears | Yes |
| Weight | 110 kg |

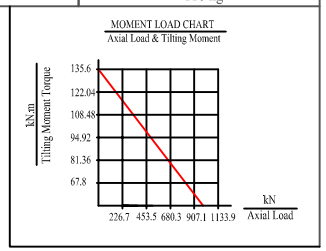


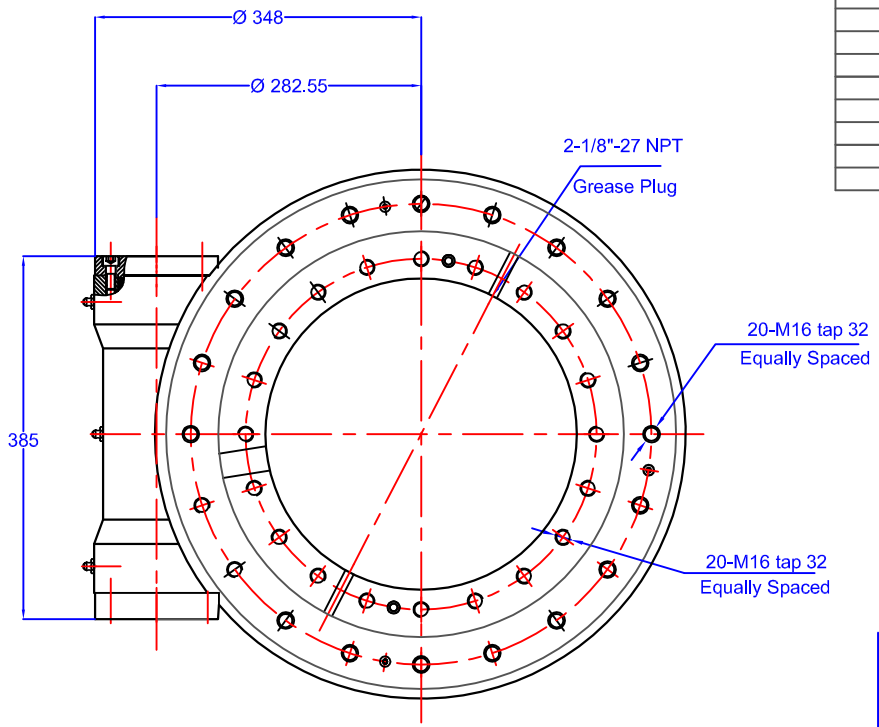


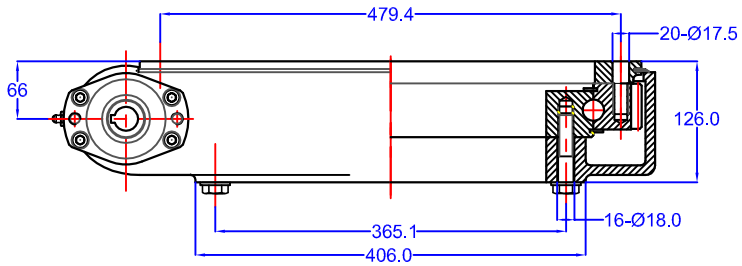


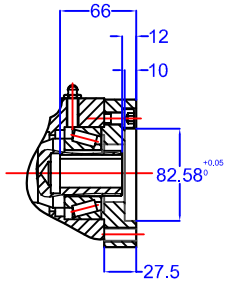


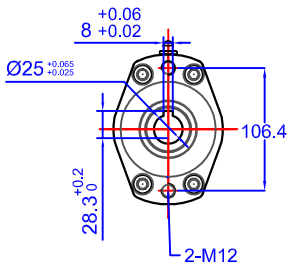


| GEAR DATA | SPUR | WORM | HELICAL |
|---|---|---|---|
| | | | |
| WORM GEAR RATIO | 102:1 | | |
| OUTPUT TORQUE | 10 KNm | | |
| HOLDBACK TORQUE | 72.3 KNm | | |
| RATED OUTPUT SPEED | < 2.5 rpm | | |
| TRACKING PRECISION | =< 0.17° | | |
| MAXIMUM LOADS | | | |
| MAXIMUM MOMENT LOAD | | | |

*Designed in accordance with designated QCB SLEWING RING STANDARDS*
*Non toleranced dimensions to ISO 2768-1 m*
*All burrs and sharp edges to be removed; Standard corner chamfer 1mm x 45°*
*Internal radial and axial clearance figures to QCB standard 2014 or revisions thereof*
*The HARDNESS GAP is to be indicated by stamped letter R or a PAINT mark on the exterior surface*
*The high point of gear eccentricity to be indicated by GREEN or BLUE paint on 3 teeth*

| BOLT DATA | | | | | |
|---|---|---|---|---|---|
| INNER | 20 = | MOUNTING HOLES | M16 CS18 | AXIAL PLAY | |
| | | | | RADIAL PLAY | |
| OUTER | 20 = | MOUNTING HOLES | M16 CS17.5 | TURNING TORQUE | |
| | | | | MATERIAL | |
| GREASE HOLES | 'G' | | 1/8"x27 NPT | WEIGHT | 110 kg |
| LOADING PLUG | 'FS' | SOFT ZONE | 'R' | DEPTH OF HARDENING (55-58HRc) | mm |
| | | SEAL SIZE | TBA | | |

*© NBC GROUP LTD. NOT TO BE COPIED WITHOUT PERMISSION*

| REV | DATE | MODIFICATION | REVISED BY |
|---|---|---|---|
| A | | | |

QCB Bearings — SLEWING RINGS & DRIVES

*imported by NBC Group Ltd*
Orleton Lane, Wellington, Telford, TF1 2BG, UK

P: 01952 222300 F: 01952 242938
www.nbcgroup.co.uk

*QCB® is a registered trademark of NBC Group Ltd*

QCB or NBC DRAWING NUMBER

# WGSE 17 102 25 H R

QCB RS 11/2016

| | |
|---|---|
| DRAWN: | LJM |
| DATE: | 12/07/2016 |
| CHECKED: | LJM |