| GEN. TOLERANCES | 0.5 - 6 | ±0.1 | 6 - 30 | ±0.2 | 30 - 120 | ±0.3 | 120 - 315 | ±0.5 | 315 - 1000 | ±0.8 | 1000 - 2000 | ±1.2 | 2000 - 4000 | ±2 | 4000 - 8000 | ±3 |
|---|---|---|---|---|---|---|---|---|---|---|---|---|---|---|---|---|
| GEN. MACHINING | ✓ | 0.4 | ✓ | 1.6 | ✓ | 3.2 | ✓ | 6.3 | ✓ | 12.6 | ✓ | 25 ROUGH | ✓ | | ✓ | |

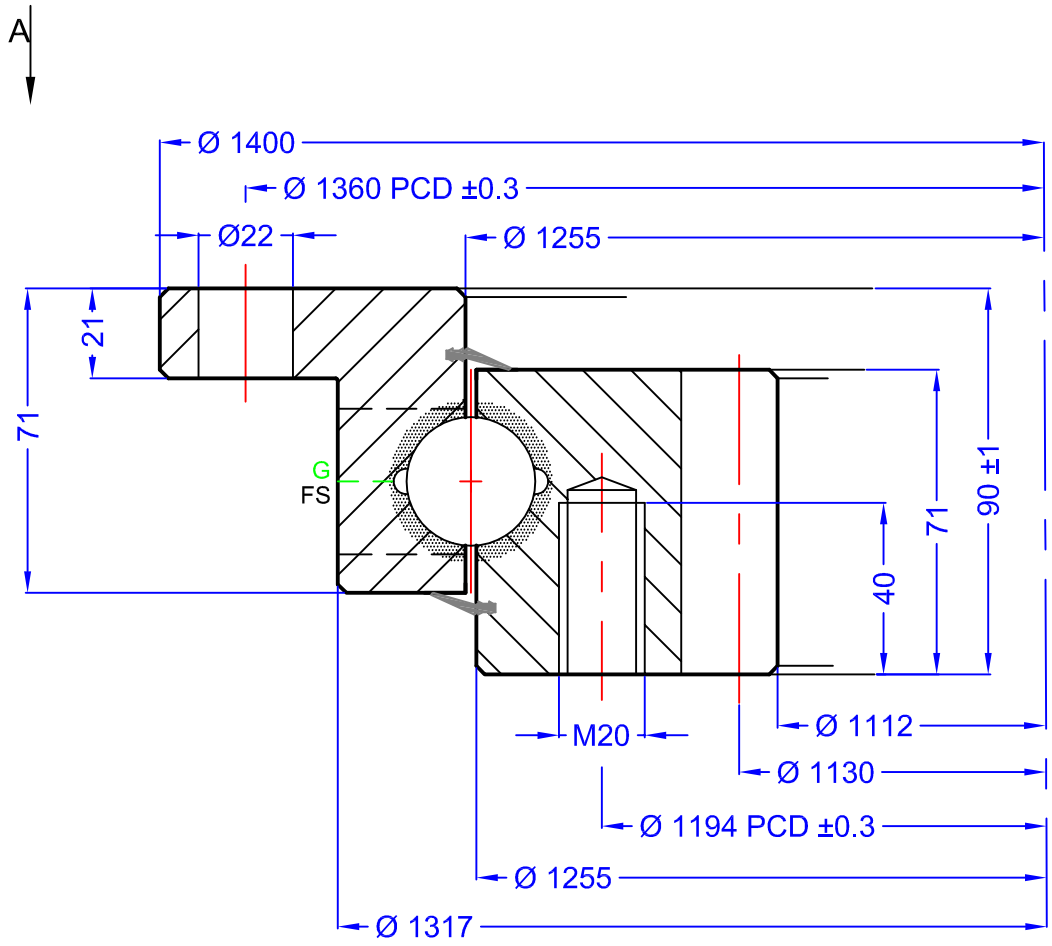


VIEW ON 'A' SHOWING DRILLING PATTERN AND OTHER DETAILS

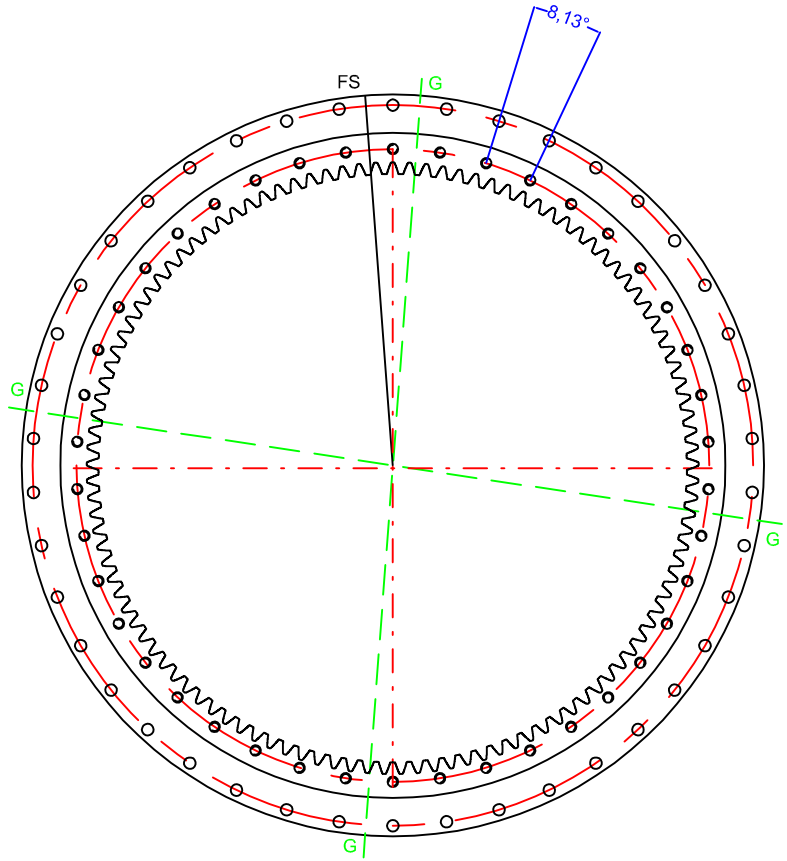


| GEAR DATA | SPUR | WORM | HELICAL |
|---|---|---|---|
| HARDENED GEAR | NO | | |
| NUMBER OF TEETH (z) | 113 | MODULE (m) | 10 |
| PRESSURE ANGLE (∝) | 20° | DP | |
| ADDENDUM COEFFICIENT (x) | 0 | | |
| PROFILE CORRECTION (xm) | 0 | CALCULATED GEAR STRENGTH | |
| TRUNCATION (km) | -1 mm | Fz (Normal) | KN |
| PITCH CIRCLE DIAMETER | 1130 mm | Fz (Max) | KN |
| MEASUREMENT ON K TEETH | mm | Pin Diameter | mm |
| RUNOUT NOT HARDENED/HARDENED | | | |

*Designed in accordance with designated QCB SLEWING RING STANDARDS*
*Non toleranced dimensions to ISO 2768-1 m*
*All burrs and sharp edges to be removed; Standard corner chamfer 1mm x 45°*
*Internal radial and axial clearance figures to QCB standard 2014 or revisions thereof*
*The HARDNESS GAP is to be indicated by stamped letter R or a PAINT mark on the exterior surface*
*The high point of gear eccentricity to be indicated by GREEN or BLUE paint on 3 teeth*

| BOLT DATA | | | | | |
|---|---|---|---|---|---|
| INNER | 42 = | MOUNTING HOLES | M20 | AXIAL PLAY | 0.15-0.35 mm |
| OUTER | 42 = | MOUNTING HOLES | Ø 22 | RADIAL PLAY | 0.15-0.35 mm |
| GREASE HOLES | 'G' | | 4 x M8 | TURNING TORQUE | Nm |
| LOADING PLUG | 'FS' | SOFT ZONE | 'R' | MATERIAL | 42CrMo4 Q&T |
| | | SEAL SIZE | TBA | WEIGHT | 208 kg (est) |
| | | | | DEPTH OF HARDENING (55-58HRc) | mm |

© NBC GROUP LTD. NOT TO BE COPIED WITHOUT PERMISSION

| REV | DATE | MODIFICATION | REVISED BY |
|---|---|---|---|
| 1 | | | |

QCB Bearings — SLEWING RINGS & DRIVES

*imported by NBC Group Ltd*
Orleton Lane, Wellington, Telford, TF1 2BG, UK
P: 01952 222300 F: 01952 242938
www.nbcgroup.co.uk

*QCB® is a registered trademark of NBC Group Ltd*

QCB or NBC DRAWING NUMBER

# FIG 1400 32 00 AA LM

QCB RS 11/2016

| | |
|---|---|
| DRAWN: | LW |
| DATE: | 29/01/2016 |
| CHECKED: | LJM |